DATA SHEET

6000-Series Side-Seal Drop Elbow

The Right Connection®

The Dixon side-seal drop elbows provide easy quick connection and disconnection to discharge hoses from a road tanker to a fill point on underground storage tanks, allowing for quick and safe product transfer. Spring-loaded levers allow the elbows to snap on securely to a side seal tight fill adaptor with minimal pressure.

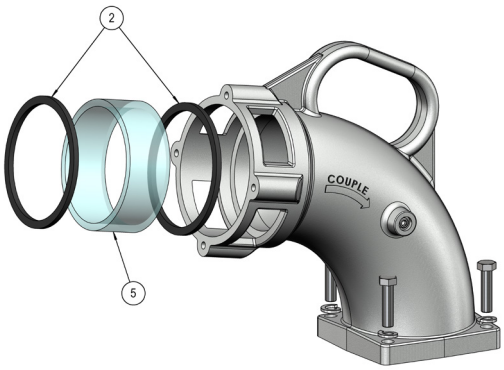

Features

- Modular design, easy repair or replacement
- Bolt-on heavy duty construction
- Driver friendly carrying grip for balanced handling
- Large sight glass and gasket seals for easy replacement
- Oversized collar and top seal gasket
- Replaceable bottom
- Bio-fuel compatible seals
- Repair kits available

Sizes

- 3” or 4” male or female camlock inlet
- 4” body outlet

Materials

- Bronze arms
- Acrylic sight glass

Description	Part #
4" side-seal elbow with 4" male inlet	6000ASA
4" side-seal elbow with 3" male inlet	6000ASC
sight glass repair kit, items 2 and 5 in above illustration	6000SGK

Dixon
1300 134 651
customerservice@dixonvalve.com.au
dixonvalve.com.au