The Right Connection®

Forged Steel Globe Valves
½" - 2" Bolted Bonnet

*Globe Valves ANSI Class 150-800: our **bellows technology** keeps corrosive or harmful atmospheric conditions from entering the process.*

interior cut-away

Application:
- For use in applications where leakage into or out of the valve is unacceptable such as heat transfer oil, toxic fluids, steam, and regulated media.

Features:
- Inconel™ bellows provide longer life and maximum corrosion resistance
- Very compact, lower piping costs
- Zero stem leakage eliminates media loss and satisfies environmental regulations
- Zero maintenance results in lower operating costs; no downtime
- Reduce monitoring costs
- Three stem seals for safety: metallic bellows, graphite packing, backseat in open position
- Hardfaced Stellite® six seating surface provides long life
- Additional alloys, trims, and other end configurations available

Specifications:
- Valve tested to ASME B16.34 / API 598
- Meets MSS SP-117
- 5 year bellows warranty

Materials

No.	Description	Carbon Steel (C22)	316L Steel (S44)
1	body	A105 [1]	A182 F316L [1]
2	bonnet	A105	A182 F316L
3	disc	type 420 stainless	type 316 stainless [1]
4	bellows assy.	Inconel™ 625 [2]	Inconel™ 625 [2]
5	stem	type 410 stainless	type 316 stainless
6	guide pin	carbon steel	carbon steel
7	joint bolt	A193 B7	A193 B8
8	gasket	graphite / 316 SS	graphite / 316 SS
9	gland packing	graphite	graphite
10	gland bushing	type 410 stainless	type 304 stainless
11	gland plate	carbon steel	type 316 stainless
12	gland bolt	type 410 stainless	type 304 stainless
13	pin	type 410 stainless	type 304 stainless
14	hex nut	carbon steel	type 304 stainless
15	yoke sleeve	type 410 stainless	copper alloy
16	thrust collar	type 410 stainless	type 410 stainless
17	handwheel	malleable iron	malleable iron
18	handle nut	carbon steel	type 304 stainless
19	grease fitting	copper alloy	copper alloy
20	name plate	aluminum	aluminum

[1] Stellite™ overlay on seating area. Stellite™ is a registered trademark of Thermadyne.
[2] Inconel™ is a trademark of Huntington Alloys, Inc.

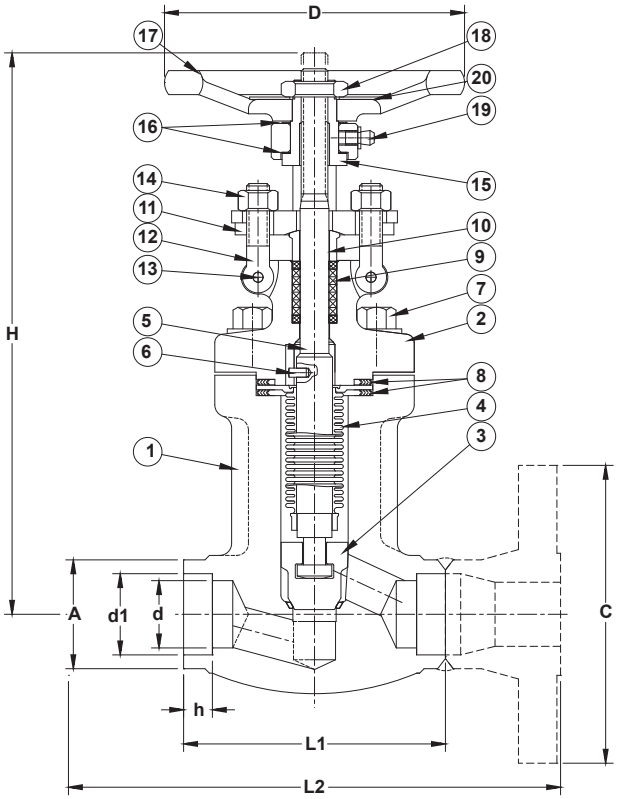

Operating Characteristics and Dimensions

Socket Weld / Threaded Globe Valves

Size	d	A	d1	h	L1	H	D	LIFT	Wt (lbs)	Cv
½"	0.63	1.34	0.855	0.39	3.11	8.3	3.94	0.26	5.9	2.7
¾"	0.87	1.57	1.065	0.51	3.62	8.3	3.94	0.26	6.2	3.1
1"	1.10	1.93	1.330	0.51	4.37	9.2	4.92	0.26	11.0	5.4
1½"	1.65	2.56	1.915	0.51	5.98	11.9	6.30	0.43	21.0	13.4
2"	2.05	3.07	2.406	0.63	6.77	12.8	7.09	0.49	30.0	23.0

Flanged Globe Valves

Size	150			300			600		
	L2	C	Wt (lbs)	L2	C	Wt (lbs)	L2	C	Wt (lbs)
½"	4.25	3.50	8.0	6.00	3.75	10.0	6.50	3.75	10.0
¾"	4.62	3.88	9.0	7.00	4.62	13.0	7.50	4.62	14.0
1"	5.00	4.25	15.0	8.00	4.88	19.0	8.50	4.88	20.0
1½"	6.50	5.00	27.0	9.00	6.12	35.0	9.50	6.12	36.0
2"	8.00	6.00	41.0	10.50	6.50	49.0	11.50	6.50	51.0

Warning & Safety

Dixon Eagle valves are designed to work safely for their intended use. Failure to know and understand the intended use or to consider the size, temperature, application, media, pressure and manufacturers recommendations when selecting the proper valve assembly components can result in accidents and injuries, including death and serious and permanent injuries. Dixon® recommends that all valve assemblies be tested in accordance with ASME and API recommendations and be inspected regularly to ensure that their use remains appropriate and that they are not damaged.

At no charge, Dixon® is available to consult, train, and recommend the proper selection and application of all valves we sell. We strongly recommend that distributors and end users make use of Dixon's Testing and Recommendation Services. Contact Dixon® to learn more.

Dixon Eagle
ph 713.678.4291 • fx 713.678.8105
eaglesales@dixonvalve.com
dixonvalve.com

connect with us on

© 2019 DVCC